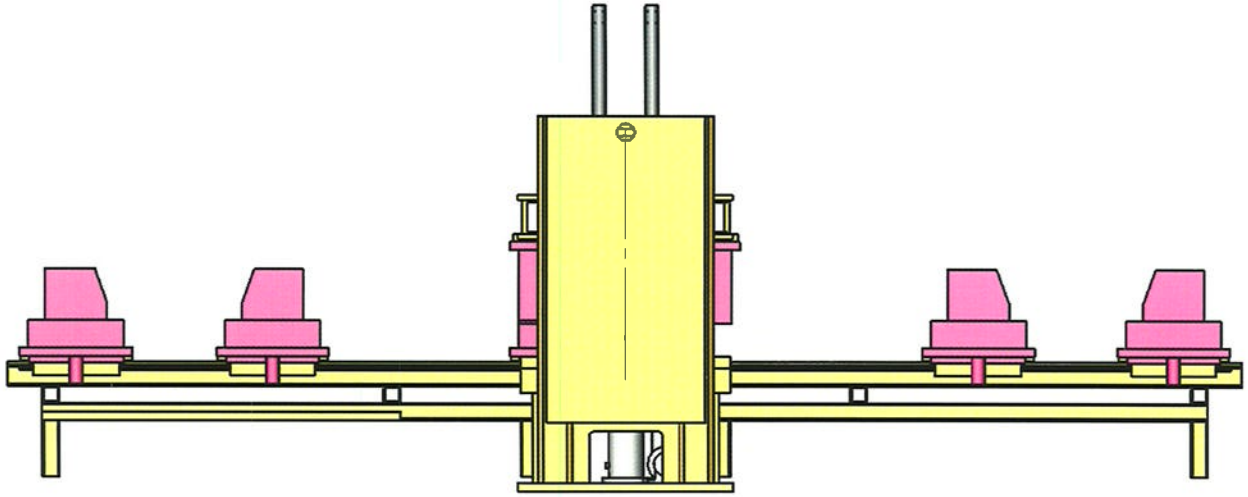

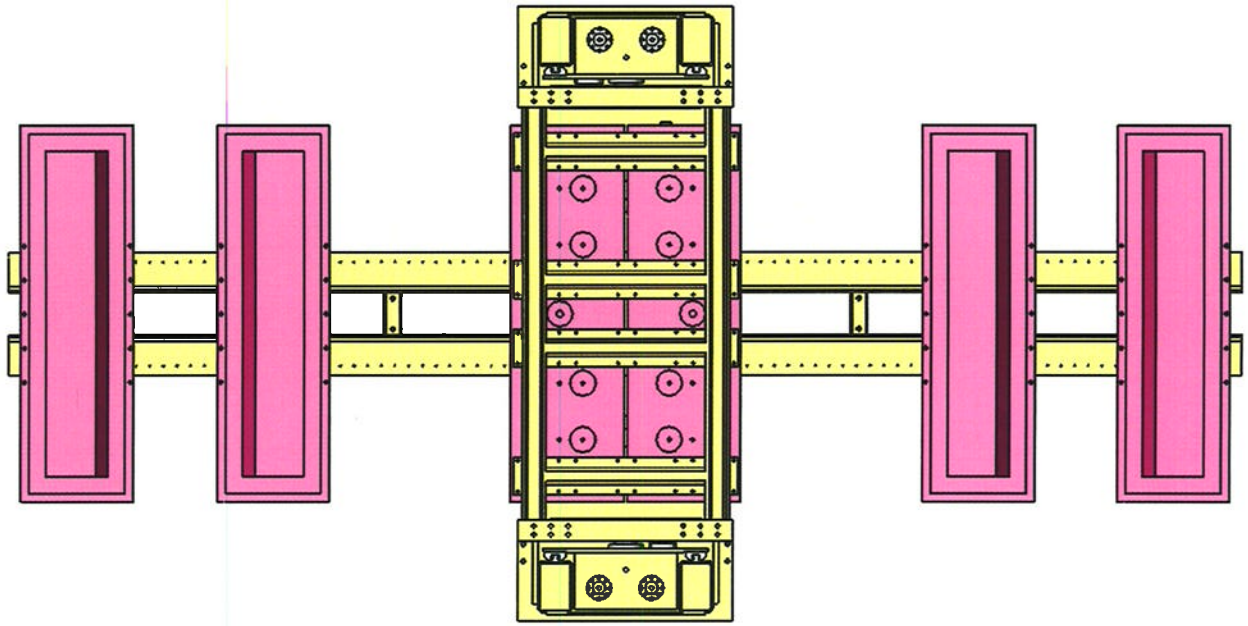

UNLESS OTHERWISE SPECIFIED DIMENSIONS ARE IN MILLIMETRES
SURFACE FINISH
TOLERANCES
LINEAR
ANGULAR

FINISH

DEBUR AND BREAK SHARP EDGES

DO NOT SCALE DRAWING

REVISION

<COMPANY NAME>

	NAME	SIGNATURE	DATE
DRAWN			
CHK'D			
APPV'D			
MFG			
Q.A			

TITLE

MATERIAL

DWG NO

A1

WEIGHT

SCALE:1:15
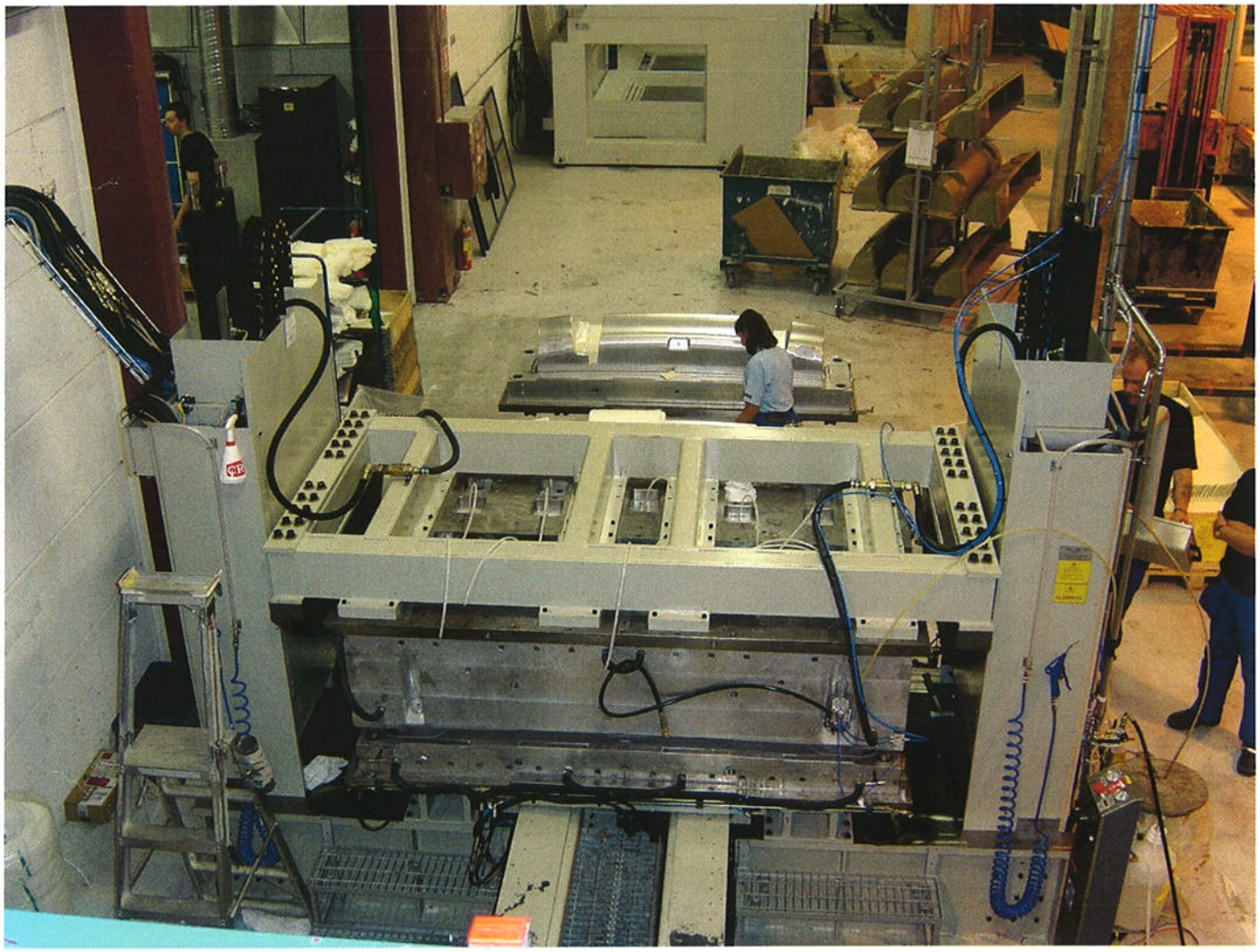
SHEET 2 OF 3